GALLIEN-KRUEGER

Operating Instructions

800RB

Operating Instructions 800RB

The Basics
Your new GK 800RB Bass Amplifier represents the latest advances that technology has to offer. Contained in a small lightweight package are a set of unbeatable voicing filters, a four-band equalizer, a tunable electronic crossover and a bi-amp power amplifier. When used properly, these features will give you the most exciting bass sound available today. A careful examination of this manual will help you understand how to take full advantage of its capabilities.

Block Diagram

Direct Out
This is an electronically balanced output that will put 500mv rms into a 600 ohm load. It comes after the effects loop and is located on the rear panel.

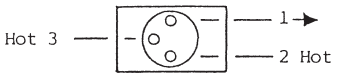

Speakers
Located on the rear panel are two sets of speaker jacks. The upper set is for the 100W power amp and in the bi-amp mode is used for the high end. They deliver 100W rms into 8 ohms. Lower impedances should not be used. Higher impedances such as 8 ohms or above are okay.

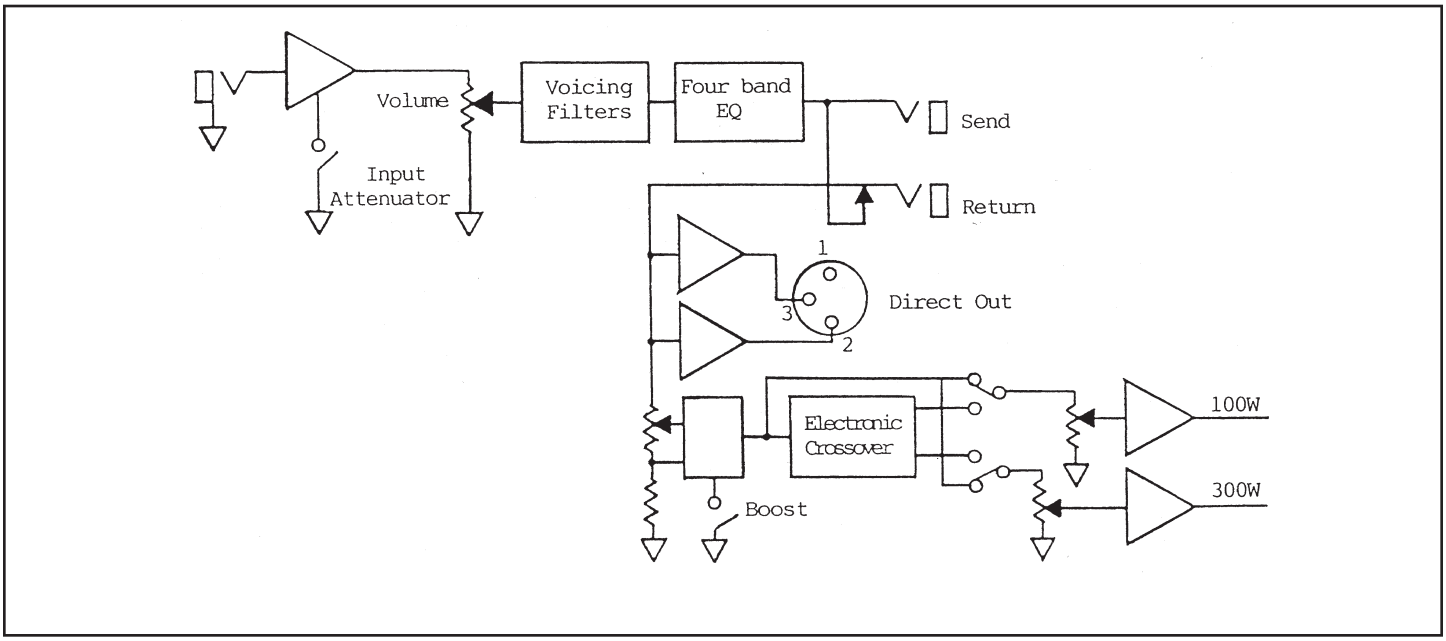

Input Section
This section contains the 1/4" input jack and the input attenuator. With the attenuator out, the maximum input level is 1V rms (3V P-P). For larger input signals, the input attenuator should be set. This reduces the gain of the input stage by 10dB, increasing the input head room to 3V rms (10V P-P).

Effects Loop
Located on the rear panel, it is provided for the insertion of outboard effects. It is post EQ but pre Boost and Master. Using standard guitar cords, connect the effects input to the send and the effects output to the return. The Boost and Master controls will not effect any signal put into the return jack. The level is 1.5V rms (4.5V P-P) into 100K ohm.

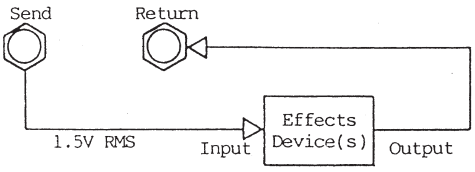

CAUTION : Under no circumstances should the 100W and 300W outputs be connected together or to the same speaker!

Power Switch
The Power Switch and associated LED indicator are located in the lower right hand corner of the front panel

Fuse
Located on the rear panel, never operate this amplifier with any other than the recommended fuse :

115V operation - replace with Type 3AG7A
230V operation - replace with Type 3AG4A

Power Cord
The Power Cord is detachable and plugs into the rear panel socket. If a replacement is used it should be UL rated for 10A, 125V operation. If using 240V, the cord should be UL rated for 240V, 5A operation.

Maintenance
Your new amplifier is rugged. It was built to give you a lifetime of trouble-free operation. If it is operated in accordance with

instructions above, your only maintenance problems should be cleaning. We recommend a soft damp cloth and mild soap for cleaning the outside surfaces. If you are going to pack your amplifier around a lot, we recommend a road case to protect it from scratches and road wear. Road bags are available from Gallien-Krueger.

Setting Up Your Sound

Your amplifier is designed to sound about right with the tone controls set flat (at"5"). We therefore recommend you start with the EQ set flat, the voicing filters out, and the crossover at 500hz ("5").

Helpful Hints

1. Don't be afraid to experiment with the EQ on your bass first. Make sure that you have as close to the sound you want from your Bass before adjusting the EQ on your amp.
2. Set your playing level first. You may want to push up your volume and boost levels while dropping back the masters. This will give a fatter sound but can add distortion. Some players find this desirable, you will have to be the judge. For the cleanest possible sound, operate the masters near or on "10" (max). The boost control is footswitchable and can act as a preset volume. The LED next to the boost control indicates that boost is on.
3. You may have to experiment with the crossover point and the relative levels of the high and low masters. It is best to adjust them before the EQ. They should be adjusted to give the most desirable sound without distorting the high end speakers. If the crossover confuses you, try switching out of the bi-amp mode and set up your sound in the full range mode first.
4. Once your basic levels are set, work with the voicing filters. The Lo Cut is a bass roll-off and is used to control stage rumble at high volume. Mid Cut puts a notch at about 500Hz, giving a mellow round sound. Hi Boost adds edge and definition.
5. Having set your levels and filters you are ready to fine tune your tone. This is an involved procedure requiring you to use your ears to tell you what is right. We have broken the sound spectrum into four basic bands and provided active controls for each. Adjustment procedures are iterative and require patience. After you have adjusted the Eq, you may want to fine tune the crossover and master controls.

TREBLE : Boost and cut at 4KHz, will add or remove edge and definition.
HIGH MID : Boost and cut at 1KHz. There is a lot of sound in this band. It works on the lower harmonics of your instrument and effects the punch of your sound.
LOW MID : Boost and cut at 250Hz. Basically, this band effects the body of your sound.
BASS : Boost and cut at 60Hz. Effects only the bottom end and will be used to account for varying room acoustics.

Specifications

Normal Gain

Sensitivity	2mv rms
Max Level	1V rms
Impedance	1M ohm

-10 Gain

Sensitivity	6mv rms
Max Level	3V rms
Impedance	1M ohm

Effects Send

Level(Boost off)	1.5V rms
Impedance	100k ohm min

Direct

Level	500mv rms
Impedance	600 ohm

Power HI-AMP

8 ohm	100w
16 ohm	60w

Power LOW-AMP

8 ohm	200w
4 ohm	300w

Boost Preset	Switch to ground, 15dB Max
Shipping Weight	23 lbs.
Dimensions	5¼"height x 17¼" width x 9 ½" depth

GALLIEN-KRUEGER • 2234 INDUSTRIAL DR
STOCKTON, CA 95206
US: (209) 234-7300 • FAX (209) 234-8420
INFO@GALLIEN.COM

GALLIEN-KRUEGER

Part#160-0004-0